SALES DRAWING SALES DRAWING

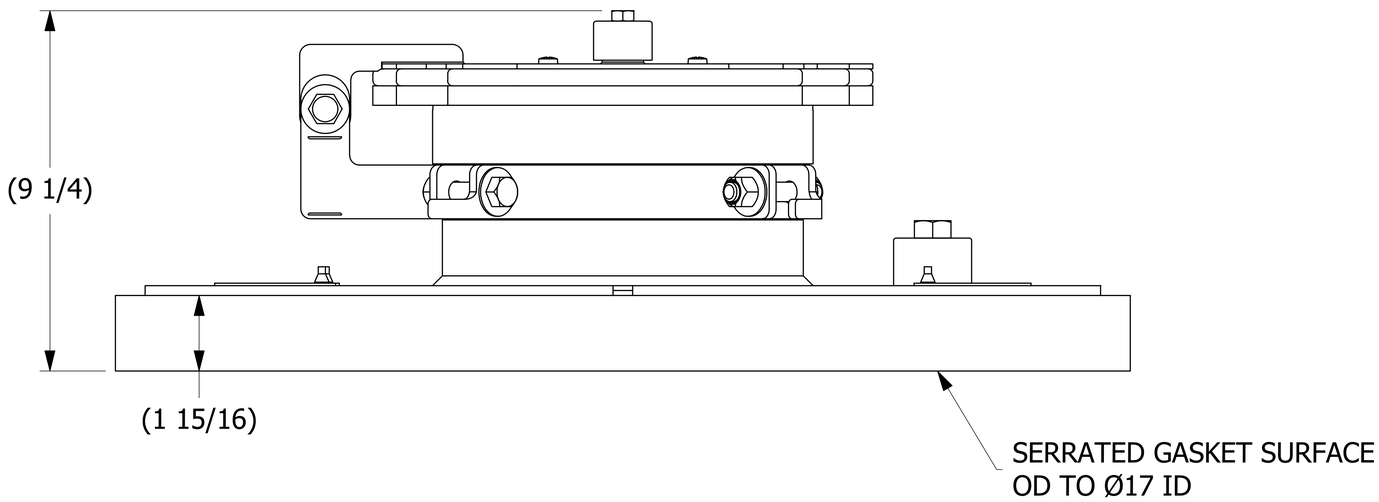

NOTES:
1. APPROXIMATE WEIGHT IS 127LB.
2. SPRING AND SAFETY COLLAR TO BE INSTALLED ON EYEBOLT IN LOCATION MARKED "A".
3. EYEBOLTS AND FILL NOZZLE GASKET SOLD SEPARATELY.

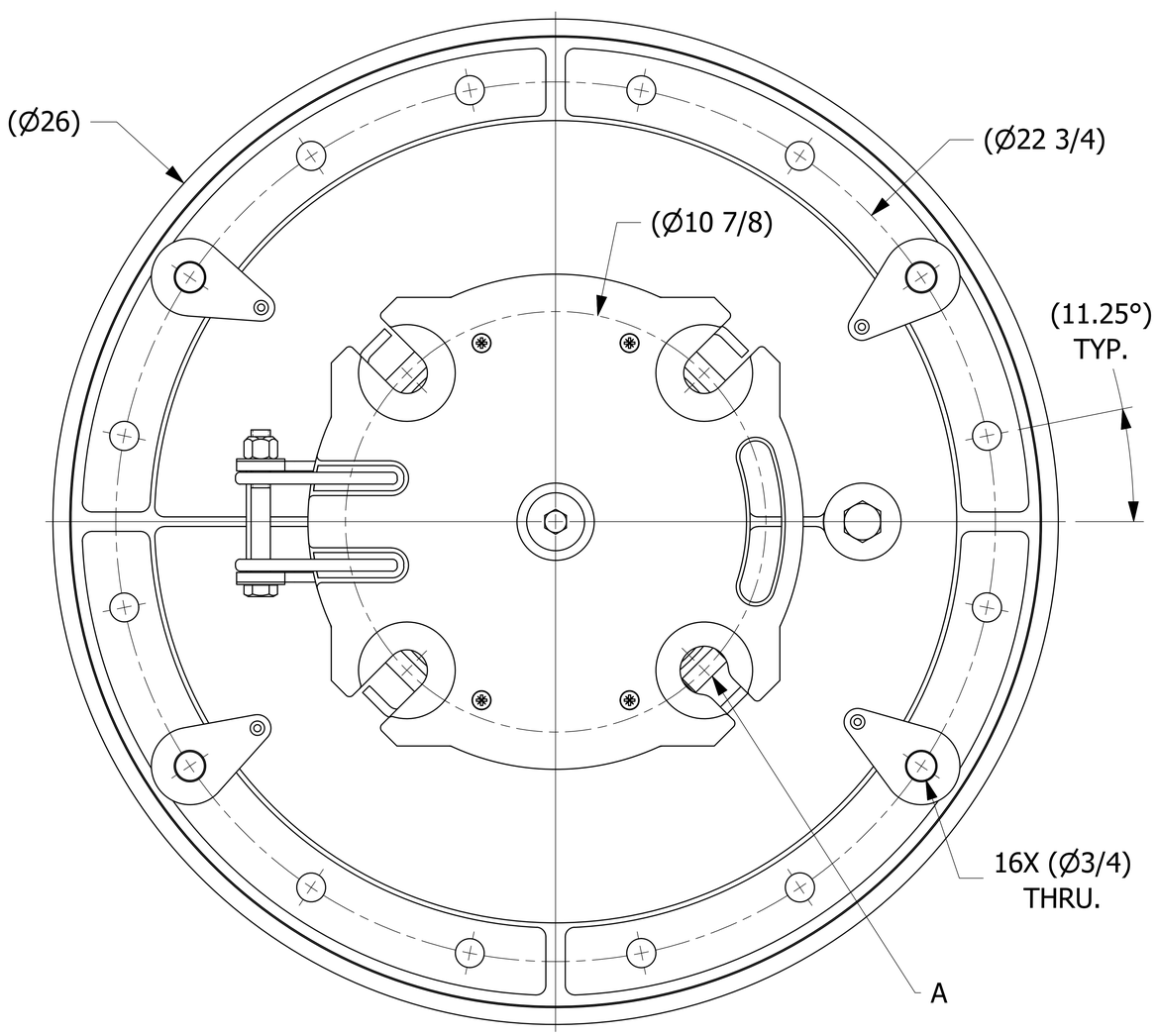

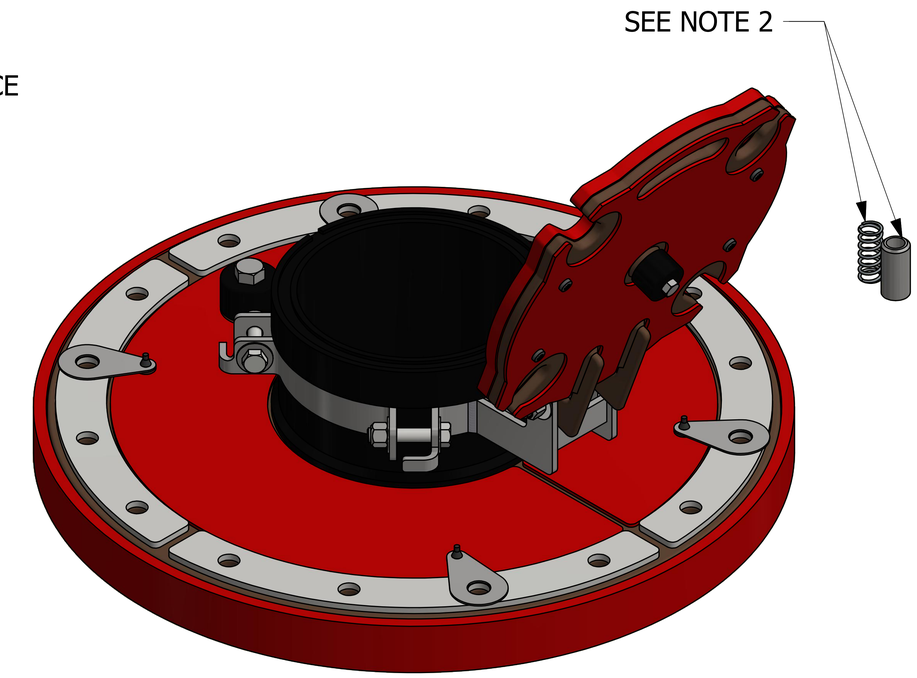

ISOMETRIC VIEW

REV	BY	DATE	DESCRIPTION
C	CHL	9-11-18	UPDATED VIEWS FOR HSFPTT1801DFUH, E42426, B42415 & C42414, ADDED 4X A47718 & E47786
B	WEB	4-12-17	REMOVED TESTING NOTE
A	TAK	3-14-17	RELEASED FOR PRODUCTION

UNLESS OTHERWISE SPECIFIED DIMENSIONAL TOLERANCES
FRACTIONAL: ±1/16
X.XX: ±.03
X.XXX: ±.015
ANGULAR: ±1°
DEBURR ALL SHARP EDGES.
ALL MACHINED SURFACES TO HAVE A 125 RMS FINISH UNLESS NOTED OTHERWISE.
THIRD ANGLE PROJECTION

DRAWN BY:	TAK
CHECKED BY:	EJF
PROTOTYPE BY:	TAK
PROTOTYPE DATE:	3/7/2016
APPROVED FOR PRODUCTION BY:	TAK
PRODUCTION DATE:	3/14/2017

SALCO PRODUCTS, INC.

PART NAME: TRUCK MANWAY 18"

MATERIAL: SALCO PE/CS/SS/PVDF

PROJECT #: 130115 | SHEET #: 1 OF 1 | SCALE: 2:3

DRAWING #: E43402 | PART #: HSFPTT1801DFUHA01

THIS PRINT, PROPERTY OF SALCO PRODUCTS INC, CONTAINS PROPRIETARY INFORMATION AND MUST NOT BE COPIED, REPRODUCED, OR USED DETRIMENTALLY TO OUR INTEREST.

SALES DRAWING SALES DRAWING